Shark

RV2700WD series

works with the Google Assistant

amazon alexa ENABLED

Robot Vacuum
WARNINGS AND WARRANTIES

IMPORTANT SAFETY INSTRUCTIONS

PLEASE READ CAREFULLY BEFORE USE • FOR HOUSEHOLD USE ONLY
If the charging cable plug does not fit fully into the outlet, reverse the plug. If it still does not fit, contact a qualified electrician. DO NOT force into outlet or try to modify to fit.

⚠ WARNING

To reduce the risk of fire, electric shock, injury, or property damage:

LASER WARNING
THIS PRODUCT HAS A CLASS 1 LASER. IT IS SAFE UNDER REASONABLY FORESEEABLE CONDITIONS (AS DEFINED IN THESE INSTRUCTIONS.) ALWAYS TURN OFF THE POWER BEFORE LIFTING THE ROBOTIC VACUUM CLEANER OR PERFORMING ANY MAINTENANCE ON IT. DO NOT LOOK DIRECTLY INTO LASER.

GENERAL WARNINGS

When using an electrical appliance, basic precautions should always be followed, including the following:

1. The robotic vacuum cleaner system consists of a robotic vacuum and charging dock with power supply. These components contain electrical connections, electrical wiring, and moving parts that potentially present risk to the user.
2. Before each use, carefully inspect all parts for any damage. If a part is damaged, discontinue use.
3. Use only identical replacement parts.
4. This robotic vacuum cleaner contains no serviceable parts.
5. Use only as described in this Owner's manual. **DO NOT** use the robotic vacuum cleaner for any purpose other than those described in this Owner's manual.
6. This appliance can be used by children ages 8 years and older and persons with reduced physical, sensory, or mental capabilities or lack of experience and knowledge if they have been given supervision or instruction concerning use of the appliance in a safe way and understand the hazards involved. Children shall not play with the appliance. Cleaning and user maintenance shall not be made by children without supervision.
7. Children should be supervised to ensure that they do not play with the appliance.
8. This appliance contains batteries that are only replaceable by skilled persons.

USE WARNINGS

9. This product has a Class 1 Laser. It is safe under reasonably foreseeable conditions (as defined in this Owner's manual). Always turn off the power before lifting the robotic vacuum cleaner or performing any maintenance on it.
10. **DO NOT** look directly into laser.
11. **DO NOT** handle plug, charging dock, charging cable, or robotic vacuum cleaner with wet hands. Cleaning and user maintenance shall not be made by children without supervision.
12. **DO NOT** damage the charging cord:
    a) **DO NOT** pull or carry charging dock by the cord or use the cord as a handle.
    b) **DO NOT** unplug by pulling on cord. Grasp the plug, not the cord.
    c) **DO NOT** close a door on the cord, pull the cord around sharp corners, or leave the cord near heated surfaces.
13. **DO NOT** put any objects into nozzle or accessory openings. **DO NOT** use with any opening blocked; keep free of dust, lint, hair, and anything that may reduce airflow.
14. **DO NOT** use robotic vacuum cleaner if airflow is restricted. If the air paths become blocked, turn the vacuum cleaner off and remove all obstructions before turning on the unit again.
15. Keep nozzle and all vacuum openings away from hair, face, fingers, uncovered feet, or loose clothing.
16. **DO NOT** use if robotic vacuum cleaner is not working as it should, or has been dropped, damaged, left outdoors, or dropped into water.
17. **DO NOT** place vacuum cleaner on unstable surfaces.
18. **DO NOT** use to pick up:
    a) Liquids.
    b) Large objects.
    c) Hard or sharp objects (glass, nails, screws, or coins).
    d) Large quantities of dust (drywall dust, fireplace ash, or embers.)
    e) **DO NOT** use as an attachment to power tools for dust collection.
    f) Smoking or burning objects (hot coals, cigarette butts, or matches).
    g) Flammable or combustible materials (lighter fluid, gasoline, or kerosene).
    h) Toxic materials (chlorine bleach, ammonia, or drain cleaner).
    i) Toxic materials (high concentrations of chlorine bleach liquid, high concentrations of ammonia, or drain cleaning solution).
19. **DO NOT** use in the following areas:
    a) Wet or damp surfaces.
    b) Outdoor areas near fireplaces with unobstructed entrances.
    c) Spaces that are enclosed and may contain explosive or toxic fumes or vapors (lighter fluid, gasoline, kerosene, paint, paint thinners, mothproofing substances, or flammable dust.)
    d) In an area with a space heater.
    e) Near fireplaces with unobstructed entrances.
20. Remove all spilled or leaked liquid from the base or floor as it could lead to risk of electrical shock and/or floor damage.
21. Turn off the robotic vacuum cleaner before any adjustment, cleaning, maintenance, or troubleshooting.
22. Allow all filters to air-dry completely before reinstalling them to prevent liquid from being drawn into electric parts.
23. **DO NOT** modify or attempt to repair the robotic vacuum cleaner or the battery yourself, except as indicated in this Owner's manual. **DO NOT** use the vacuum if it has been modified or damaged.
24. Keep fingers clear of wheels and suspension system at all times while robot is powered on.
25. **DO NOT** use any household cleaners (all purpose cleaners, glass cleaners, bleach) on any of the polished high gloss surfaces on the docking station or robot vacuum cleaner as they contain chemical that may damage these surfaces. Instead use a cloth dampened with water to gently clean.
26. This appliance consists of a robotic vacuum cleaner and charging dock with power supply. These components contain electrical connections, electrical wiring, and moving parts that potentially present risk to the user.
27. To prevent corrosion or damage to the product, only use the Shark® branded floor cleaner in the water tank. **DO NOT** add too much cleaning fluid to prevent the robot from working improperly due to slipping. To avoid water tank deformation, **DO NOT** add hot water in the tank, only room temperature water. If water marks remain on the water tank, wipe them clean before reinstallation.
28. With the exception of some filters and dust bin, **DO NOT** expose any parts of the robotic vacuum cleaner to water or other liquids.
29. Always turn off the robotic vacuum cleaner before inserting or removing the filter, dust bin, or fluid reservoir.
30. **DO NOT** use the robotic vacuum cleaner without the dust bin and filter in place.
31. If robotic vacuum cleaner is not starting from the dock, it must be placed in an unobstructed circle of 1.5 ft. (45 cm) away from edges and cliffs.

BATTERY USE

32. The battery is the power source for the vacuum. Carefully read and follow all charging instructions.
33. To prevent unintentional starting, ensure the vacuum is powered off before picking it up or carrying it.
34. For Shark® STRATOS® NEVERTOUCH™ dock replacement, use 1444KKU2710ZE, 1443KKU2710ZE, or equivalent. For replacement batteries, use RVBAT85002 (33V) RVBAT850 (MH1), or RVBAT850 (26V) battery packs.
35. Keep the battery away from all metal objects such as paper clips, coins, keys, nails, or screws. Shorting the battery terminals together increases the risk of fire or burns.
36. Under abusive conditions, liquids may be ejected from the battery. Avoid contact with this liquid, as it may cause irritation or burns. If contact occurs, flush with water. If liquid contacts eyes, seek medical help.
37. Robotic vacuum cleaner should not be stored, charged, or used at temperatures below 50°F (10°C) or above 104°F (40°C). Ensure the battery and vacuum have reached room temperature before charging or use. Exposing the robotic vacuum cleaner or battery to temperatures outside of this range may damage the battery and increase the risk of fire.
38. **DO NOT** expose the robotic vacuum cleaner or battery to fire or temperatures above 265°F (130°C) as it may cause explosion.

SAVE THESE INSTRUCTIONS

END-USER LICENSE AGREEMENT FOR SHARKNINJA SOFTWARE

IMPORTANT: PLEASE READ THE TERMS AND CONDITIONS OF THIS LICENSE AGREEMENT CAREFULLY BEFORE CONTINUING WITH THIS PROGRAM INSTALL OR USE OF THIS PRODUCT: SharkNinja Operating LLC's ("SharkNinja") End-User License Agreement ("EULA") is a legal agreement between You (either a single entity or an individual) and SharkNinja for SharkNinja's Software Applications, including those installed by You onto your SharkNinja products or already installed on your device, including all firmware (referred hereafter as "SN APPS"). By installing, copying, checking a box, clicking a button confirming your agreement to these terms, or otherwise continuing to use the SN APPS, You agree to be bound by the terms of this EULA. This license agreement represents the entire agreement concerning SN APPS between You and SharkNinja, and it supersedes any prior proposal, representation, or understanding between the parties. If You do not agree to the terms of this EULA, do not install or use the SN APPS or this product.

The SN APPS are protected by copyright laws and international copyright treaties, as well as other intellectual property laws and treaties.

1. GRANT OF LICENSE. The SN APPS are licensed as follows:

1.1 Installation and Use. SharkNinja grants You the right to download, install, and use SN APPS on the specified platform for which the SN APP was designed and in connection with SharkNinja products with which the SN APPS are designed to operate ("SN Devices").

1.2 Backup Copies. You may also make a copy of SN APPS downloaded and installed by You for backup and archival purposes.

2. DESCRIPTION OF OTHER RIGHTS AND LIMITATIONS.

2.1 Maintenance of Copyright Notices. You must not remove or alter any copyright notices on any and all copies of the SN APPS.

2.2 Distribution. You may not distribute copies of the SN APPS to third parties.

2.3 Prohibition on Reverse Engineering, Decompilation, and Disassembly. You may not reverse engineer, decompile, or disassemble SN APPS, except and only to the extent that such activity is expressly permitted by applicable law notwithstanding this limitation.

2.4 Rental. You may not rent, lease, or lend SN APPS without written permission from SharkNinja.

2.5 NOT FOR RESALE SOFTWARE. Applications identified as "Not for Resale" or "NFR," may not be resold, transferred, or used for any purpose other than demonstration, test, or evaluation.

2.6 Support Services. SharkNinja may provide You with support services related to SN APPS ("Support Services"). Any supplemental software code provided to You as part of the Support Services shall be considered part of SN APPS and subject to the terms and conditions of this EULA.

2.7 Compliance with Applicable Laws. You must comply with all applicable laws regarding use of SN APPS.

3. UPDATES. SharkNinja may provide You with upgrades or updates to SN APPS. This EULA will govern any upgrades provided by SharkNinja that replace and/or supplement SN APPS, unless such upgrade is accompanied by a separate EULA, in which case the terms of that EULA will govern. If You decide not to download and use an upgrade or update provided by SharkNinja, You understand that You could put SN Apps at risk to serious security threats or cause SN Apps to become unusable or unstable.

4. DATA AND PRIVACY. SharkNinja is committed to ensuring your privacy by adhering to high standards of fairness and integrity. We are committed to keeping our customers informed about how we use the information we gather from You through the use of each of our websites or SN APPS. Our privacy practices are described in SharkNinja's Privacy Policy, as well as in separate notices given when an app, product, or service is purchased or downloaded. By using SN APPs or providing us with your personal information, You are accepting and consenting to the practices, terms, and conditions described in SharkNinja's Privacy Policy. At all times your information will be treated in accordance with the SharkNinja Privacy Policy, which is incorporated by reference into this EULA and can be viewed at the following URL: **http://www.sharkclean.com/page/privacy-policy**.

5. THIRD-PARTY APPLICATION LIBRARIES AND EMBEDDED SOFTWARE.

5.1 You acknowledge that Ayla Networks, Inc. ("Ayla") has provided certain application libraries that have been embedded into SN APPS ("Ayla Application Libraries") and enables SN Devices to connect to the Ayla Cloud Service ("Ayla Embedded Software").

5.2 You will not use the Ayla Application Libraries except as an incorporated portion of SN APPS, unmodified from the form provided to You.

5.3 You will not use the Ayla Embedded Software except as an incorporated portion of SN Devices, unmodified from the form provided to You.

5.4 You will not modify, adapt, translate, or create derivative works based on, or decompile, disassemble, reverse engineer, or otherwise attempt to derive the source code or underlying algorithms of, the Ayla Application Libraries or the Ayla Embedded Software.

5.5 SharkNinja retains all ownership of SN APPS (and the Ayla Application Libraries contained therein) and any software installed on SN Devices (including the Ayla Embedded Software) and only a license thereto is granted to You for use in connection with the SN APPS and SN Devices.

5.6 You will not use the Ayla Application Libraries or Ayla Embedded Software to attempt to gain unauthorized access to or use of the systems/services of SharkNinja's other licensors; nor will You transmit viruses, worms, Trojan horses, time bombs, spyware, malware, cancelbots, passive collection mechanisms, robots, data mining software, or any other malicious or invasive code or program into the systems/services of SharkNinja's other licensors.

5.7 You will not use the Ayla Application Libraries or Ayla Embedded Software to interfere with, breach, or circumvent any security feature, authentication feature, or any other feature that restricts or enforces limitations on the use of, or access to, the systems/services of SharkNinja's other licensors.

5.8 You will not probe, attack, scan, or test the vulnerability of the systems/services of SharkNinja's other licensors.

5.9 SharkNinja's other licensors of the SN APPS, Ayla Application Libraries, and the Ayla Embedded Software are the express third-party beneficiaries of this EULA, and the provisions of this Section of this EULA are made expressly for the benefit of such licensors, and are enforceable by such licensors.

6. TERMINATION. Without prejudice to any other rights, SharkNinja may terminate this EULA if You fail to comply with the terms and conditions of this EULA. In such event, You must destroy all copies of SN APPS in your possession.

7. COPYRIGHT. All title, including but not limited to copyrights, in and to SN APPS and any copies thereof are owned by SharkNinja or its suppliers. All title and intellectual property rights in and to the content which may be accessed through use of SN APPS are the property of the respective content owner and may be protected by applicable copyright or other intellectual property laws and treaties. This EULA grants You no rights to use such content. All rights not expressly granted are reserved by SharkNinja.

8. OPEN SOURCE SOFTWARE. You hereby acknowledge that SN APPS may contain software that is subject to "open source" or "free software" licenses ("Open Source Software"). The license granted by this EULA does not apply to Open Source Software contained in the SN APPS. Rather, the terms and conditions in the applicable Open Source Software license shall apply to the Open Source Software. Nothing in this EULA limits your rights under, or grants You rights that supersede, any Open Source Software license. You acknowledge that the Open Source Software license is solely between You and the applicable licensor of the Open Source Software. To the extent the terms of the licenses applicable to the Open Source Software require SharkNinja to provide the Open Source Software, in either source or executable form, or to provide copies of applicable license terms or other required information, You may obtain a copy of the software by contacting SharkNinja at the below physical address. Additional information about the Open Source Software, and its terms of use.

9. NO WARRANTIES. SharkNinja expressly disclaims any warranty for SN APPS, Ayla Application Libraries, or Ayla Embedded Software. SN APPS, Ayla Application Libraries, and Ayla Embedded Software are provided 'As Is' without any express or implied warranty of any kind, including but not limited to any warranties of merchantability, noninfringement, fitness of a particular purpose, or title. SharkNinja does not warrant or assume responsibility for the accuracy or completeness of any information, text, graphics, links, or other items contained within the SN APPS. SharkNinja makes no warranties respecting any harm that may be caused by the transmission of a computer virus, worm, logic bomb, or other such computer program. SharkNinja further expressly disclaims any warranty or representation to any third party.

10. LIMITATION OF LIABILITY. In no event shall SharkNinja or its suppliers be liable for any special, incidental, punitive, indirect, or consequential damages whatsoever (including, but not limited to, damages for loss of profits or confidential or other information, for business interruption, for personal injury, for loss of privacy, for failure to meet any duty including of good faith or of reasonable care, for negligence, and for any other pecuniary or other loss whatsoever) arising out of or in any way related to the use of or inability to use SN Devices or SN APPS, the provision of or failure to provide support or other services, information, software, and related content through the product or otherwise arising out of the use of SN APPS, or otherwise under or in connection with any provision of this EULA, even in the event of the fault, tort (including negligence), strict liability, breach of contract, or breach of warranty of SharkNinja or any supplier, and even if SharkNinja or any supplier has been advised of the possibility of such damages. SharkNinja shall have no liability with respect to the content of the SN APPS or any part thereof, including but not limited to errors or omissions contained therein, libel, infringements of rights of publicity, privacy, trademark rights, business interruption, personal injury, loss of privacy, moral rights, or the disclosure of confidential information.

11. APPLICABLE LAW. The laws of the Commonwealth of Massachusetts will govern this EULA and You hereby consent to exclusive jurisdiction and venue in the state and federal courts sitting in the Commonwealth of Massachusetts.

12. ASSIGNMENT. SharkNinja may assign this EULA without notice to Licensor.

13. ENTIRE AGREEMENT. This EULA (including any addendum or amendment to this EULA which is included with the SN Devices) is the entire agreement between You and SharkNinja relating to the SN APPS and supersedes all prior or contemporaneous oral or written communications, proposals and representations with respect to the SN APPS or any other subject matter covered by this EULA. To the extent the terms of any SharkNinja policies or programs for support services conflict with the terms of this EULA, the terms of this EULA shall control.

FCC WARNINGS

This equipment has been tested and found to comply with the limits for a Class B digital device, pursuant to parts 15 of the FCC Rules. These limits are designed to provide reasonable protection against harmful interference in a residential installation. This equipment generates, uses, and can radiate radio frequency energy and, if not installed and accordance with the instructions, may cause harmful interference to radio communications.
However, there is no guarantee that interference will not occur in a particular installation.
If this equipment does cause harmful interference to radio or television reception, which can be determined by turning the equipment off and on, the user is encouraged to try to correct the interference by one or more of the following measures:

- Reorient or relocate the receiving antenna.
- Increase the separation between the equipment and receiver.
- Connect the equipment into an outlet on a circuit different from that to which the receiver is connected.
- Consult the dealer or an experienced radio/TV technician for help.

This Device complies with part 15 of the FCC rules. Operation is subject to the following conditions:

1 This device may not cause harmful interference
2 This device must accept any interference received, including interference that may cause undesired operation.

Changes or modifications not expressly approved by the party responsible for compliance could void the user's authority to operate this device.

ISED STATEMENT

This device complies with Industry Canada license-exempt RSS standard(s).
Operation is subject to the following two conditions: (1) this device may not cause interference, and (2) this device must accept any interference, including interference that may cause undesired operation of the device.

BATTERY REMOVAL AND DISPOSAL

This product uses a battery. When the battery no longer holds a charge, it should be removed from the vacuum and recycled. DO NOT incinerate or compost the battery.

When your lithium-ion battery needs to be replaced, dispose of it or recycle it in accordance with local ordinances or regulations. In some areas, it is illegal to place spent lithium-ion batteries in the trash or in a municipal solid waste stream. Return spent battery to an authorized recycling center or to retailer for recycling.
Contact your local recycling center for information on where to drop off the spent battery.

For more information on battery removal for disposal, please visit sharkclean.com/batterysupport.

The RBRC™ (Rechargeable Battery Recycling Corporation) seal on the lithium-ion battery indicates that the costs to recycle the battery at the end of its useful life have already been paid by SharkNinja. In some areas, it is illegal to place spent lithium-ion batteries in the trash or municipal solid waste stream and the RBRC program provides an environmentally conscious alternative.

RBRC, in cooperation with SharkNinja and other battery users, has established programs in the United States and Canada to facilitate the collection of spent lithium-ion batteries.
Help protect our environment and conserve natural resources by returning the spent lithium-ion battery to an authorized SharkNinja service center or to your local retailer for recycling.
You may also contact your local recycling center for information on where to drop off the spent battery or call 1-888-668-9600.

SharkNinja Operating LLC

sharkclean.com © 2025 SharkNinja Operating LLC. SHARK and SHARKCLEAN are registered trademarks of SharkNinja Operating LLC. POWERDETECT is a trademark of SharkNinja Operating LLC. RBRC is a trademark of Rechargeable Battery Recycling Corporation. APPLE, the Apple logo, and iPhone are trademarks of Apple Inc., registered in the U.S. and other countries.
APP STORE is a service mark of Apple Inc., registered in the U.S. and other countries. GOOGLE, GOOGLE ASSISTANT, GOOGLE PLAY, the Google Play logo, and Android are trademarks of GOOGLE LLC.

REFURBISHED PRODUCT LIMITED NINETY DAYS WARRANTY

The ***Refurbished Product Service Center*** offers the following WARRANTY to the ORIGINAL purchaser of a product which we have refurbished.

This product that has been refurbished is warranted against any electronic or mechanical defects for a period of NINETY DAYS from the date of the original purchase by the consumer. Since this unit was sold as a refurbished item, the warranty does not apply to any cosmetic appearance items such as scratches. Should a defect occur, the ***Refurbished Product Service Center*** will repair or, at its option, replace defective unit/parts with new or rebuilt materials without charge for either parts or labor. Replacement unit/parts will be warranted for the remaining portion of the original warranty period.

This warranty does not cover installation or damage from accident, misuse, abuse, improper wiring, incorrect voltage, operating the unit against the instructions in the owner's manual or any product which has been opened, altered, or tampered with.

This warranty does not cover costs for removal and or installation of the unit for repair. Under no circumstances shall the service center be liable for any special, incidental or consequential damages or for any other expenses incurred by reason of use or sale of this product. This warranty is in lieu of any other warranties expressed or implied warranty of merchantability of fitness for particular use or otherwise.

This warranty gives the consumer specific legal rights and they may also have other rights which vary from State to State. Some States do not follow the exclusion or limitation of incidental or consequential damages, hence the above exclusion and limitations may not apply.

Refurbished Product Service Center
9043 Siempre Viva Rd Suite 110/120, San Diego CA, 92154

WARRANTY REPAIR INFORMATION

If you need service on your unit and this product requires repair during the 90 days warranty period; please go to **www.ConsumerServiceRefurbish.com** or call the ***Refurbished Product Service Center*** at 562-946-3531 to obtain the required return authorization (RA) number. Pack the unit properly (the original carton is ideal for this purpose) along with a copy of your purchase receipt and a letter describing the problem. Send the unit freight prepaid and insured to:

Refurbished Product Service Center,
Att: Customer Service Department 9043 Siempre Viva Rd Suite 110/120, San Diego CA, 92154

Your unit will be promptly repaired and returned to you.
We will refuse to accept delivery of the returned unit unless the assigned RA number appears on the outside of the shipping carton.

Owner's Information
(Keep for your permanent records)

NAME: _____

ADDRESS: _____

CITY: _____

STATE: _____

ZIP CODE: _____

PHONE: _____

E-MAIL: _____

MODEL: _____

SERIAL NO.: _____

PRINTED IN MEXICO / **Elbrd**: J.M / **SC**: 03-19-2026
OBPN: RV2700WD_Series_WarningsWarranty_MP_Mv7_250729 / **SHNMDL**: RV2872ZEUS
8 1 4 1 0 0 7 2 2

814000722

Shark STRATOS® NEVERTOUCH™

SELF-CLEANING BASE **2-IN-1**

ROBOT VACUUMS & MOPS • BASE SELF-EMPTIES, SELF-CLEANS & SELF-REFILLS

Please read this guide carefully before operating your unit and retain for future reference.

WHAT'S INCLUDED:

1. Robot
2. NeverTouch™ Base
3. Ramp
4. Side Brush
5. Mopping Pads
6. Odor Cartridge Assembly
7. Shark® Multi-Surface Cleaner 12 oz. (355 mL) Bottle

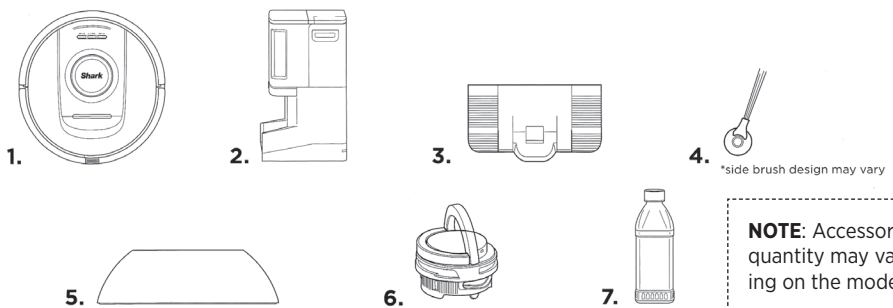

NOTE: Accessory type and quantity may vary depending on the model.

The images shown in this guide are for illustrative purposes only and may be subject to change.

NOTE: In order to ensure the highest possible standard for refurbished items, all units are thoroughly inspected as part of the process.
For this item, water may be used during the refurbishing process and so; you may notice some condensation in the water reservoir. It is recommended to rinse the water reservoir with fresh water prior to its first use.

SETTING UP YOUR ROBOT

Remove all parts and accessories from the box before starting the following setup steps.

1 Set Up Base

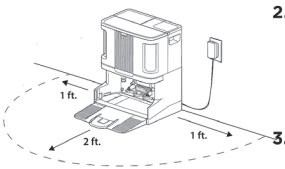

Note: *Do not setup the base on or within 2 feet of a carpeted surface.*

1. Remove all plastic wrap.
2. Place the base on a flat, level hard-floor surface in a location with strong Wi-Fi signal, with 2 feet of clearance in front and one foot on either side.
3. Ensure the base is not placed in area with direct sunlight.
4. Plug in the base. The LED indicator light will turn green when the base is powered on.

2 Install Ramp On Base & Fill Water Tank

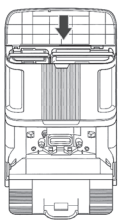

1. Install the ramp onto the front of the base. Press down until the ramp clicks into place.
2. **Lift the lid on the top front half of the base. Remove the clean water tank on the right side.**
3. **Add 12 oz. of cleaning solution. Fill the rest of the tank with room-temperature water up to the MAX fill line, then reinstall the tank.**

3 Attach a Side Brush to Bottom of Robot

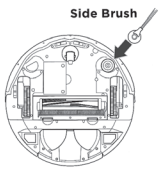

Note: *Side brush design may vary. Some models include a spare.*

1. The side brush can be found inside the robot box.
2. Align the hole in the brush over the peg on the bottom of the robot, then press down on the brush until it clicks into place.

4 Slide Robot Onto Base

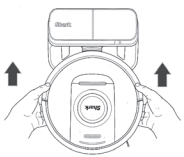

1. **Align the robot with the Shark logo upside down, then slide it up the ramp, onto the base.**
2. The LEDs on the base will turn green when the robot is charging.
3. After 10 to 15 seconds, the robot will begin to evacuate dust and debris into the base.

5 Insert Odor Cartridge Assembly

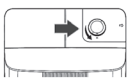

1. Insert cartridge assembly into the top of the base.
2. Rotate the cartridge until it clicks into place.

Note: *Make sure the odor cartridge assembly is installed in the base before using the robot.*

6 Download & Explore the SharkClean® App

To start a dry cleaning, use the app, or press the Dry icon ▢ on your robot.

App Features

- ✔ Mapping
- ✔ Scheduling
- ✔ No-Go Zones
- ✔ Cleaning Reports

Download on the App Store

GET IT ON Google Play

© 2025 SHARK, SHARKCLEAN, and STRATOS are registered trademarks of SharkNinja Operating LLC. NEVERTOUCH is a trademark of SharkNinja Operating LLC. APPLE and the Apple logo are trademarks of Apple Inc. registered in the U.S. and other countries. APP STORE is a service mark of Apple Inc. registered in the U.S. and other countries. GOOGLE. GOOGLE ASSISTANT, GOOGLE PLAY, the Google Play logo, and Android are trademarks of GOOGLE LLC.

PRINTED IN MEXICO / Elbrd: J.M / **SC**: 03-19-2026

OBPN: RV2720ZE_QSG_PKG_INSRT_ONT_MP_Mv2_250728 / **SHNMDL**: RV2872ZEUS_E2GB

8 1 4 0 0 0 7 2 2